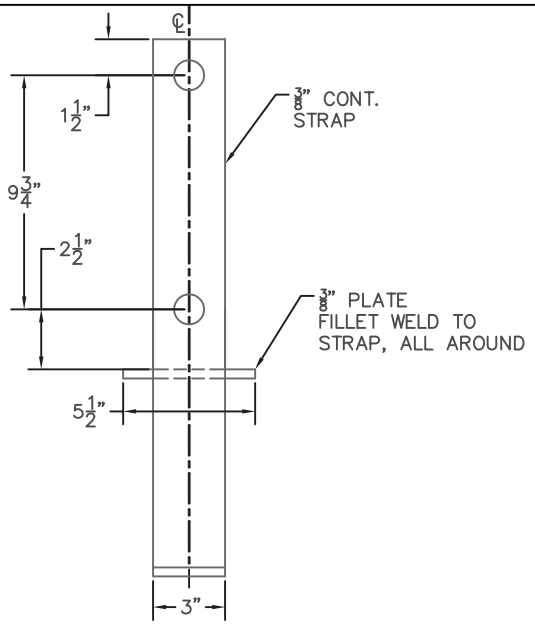

A POST BASE SIDE VIEW

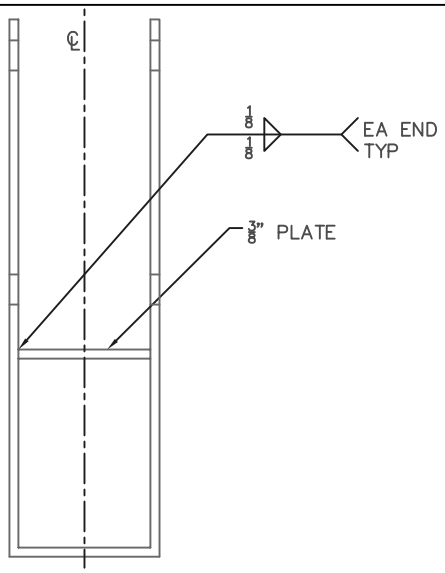

B POST BASE FRONT VIEW

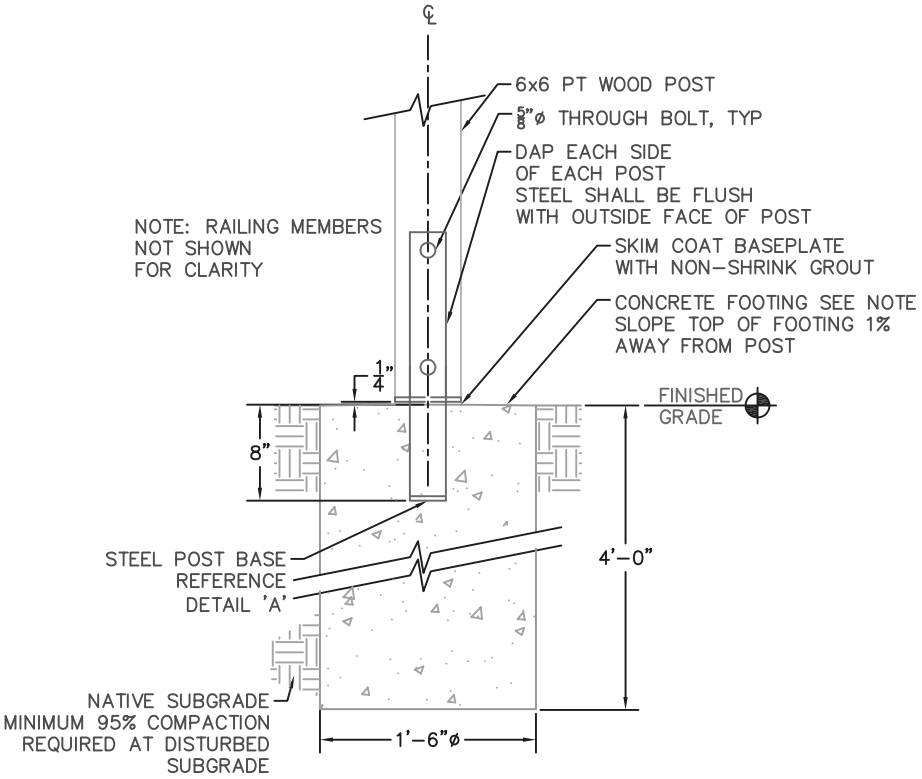

GUARDRAIL FOUNDATION

NOTES:

A. ALL STEEL SHALL BE A36 STRUCTURAL UNLESS NOTED OTHERWISE.
B. FOOTING DESIGN MAY VARY PER SITE CONDITIONS.
C. REFERENCE NOTES ON DETAIL 2840.05 FOR ADDITIONAL REQUIREMENTS.
D. NO FIELD WELDS ARE PERMITTED.

PARKS AND RECREATION DESIGN AND DEVELOPMENT	CITY OF BELLINGHAM WOOD GUARDRAIL FOUNDATION & POST BASE	DRAWING 2840.04