PRAB APPROVAL 01/13/2010

PARKS AND RECREATION
DESIGN AND DEVELOPMENT
February 4, 2010

CITY OF BELLINGHAM
WOOD GUARDRAIL ELEVATION
Scale: 1/2" = 1'-0"

DRAWING
2840.03

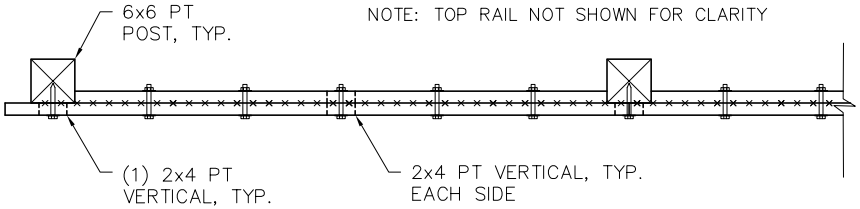


GUARDRAIL PLAN VIEW

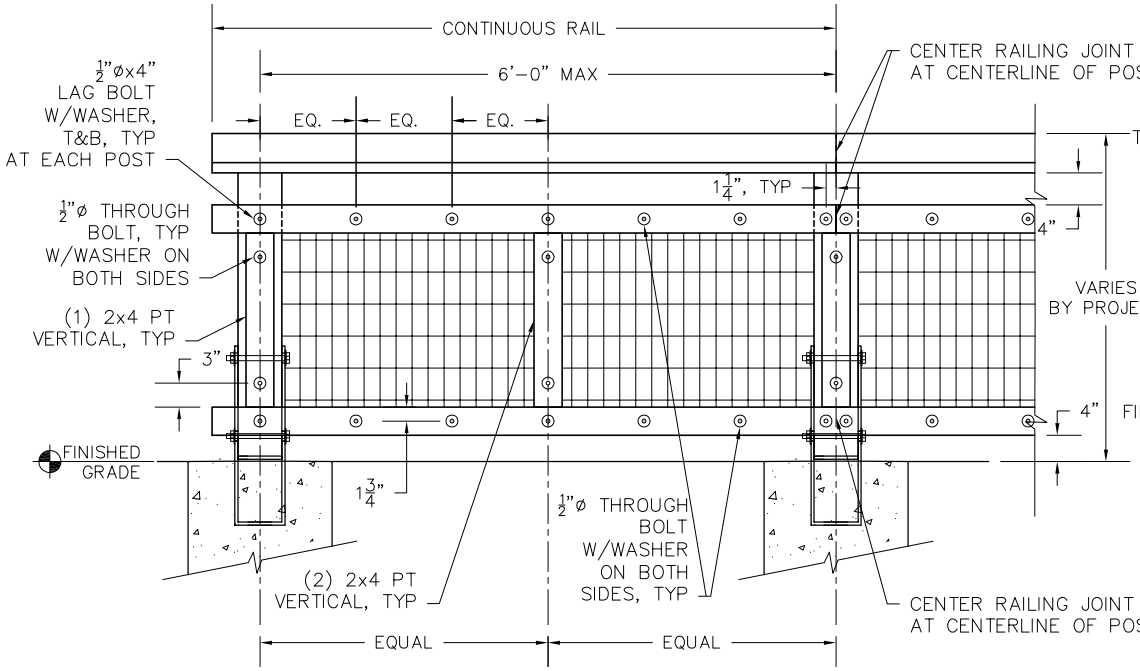


GUARDRAIL INTERIOR ELEVATION

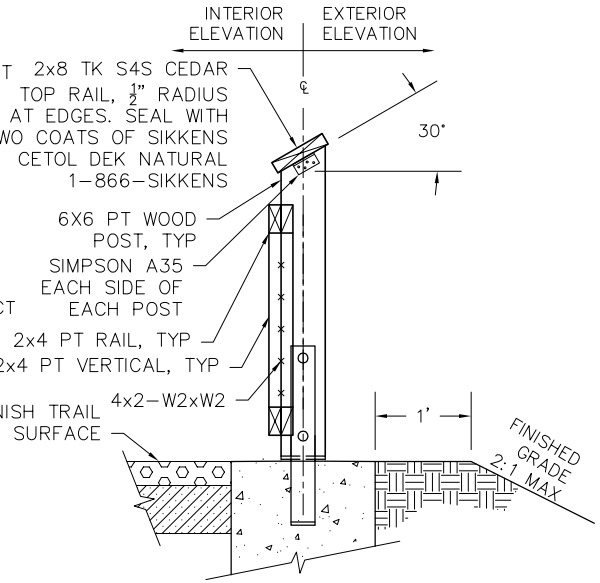


GUARDRAIL SIDE VIEW

NOTES:

A. DESIGN SHOWN REPRESENTS MINIMUM DESIGN REQUIREMENTS FOR GUARDRAILS ALONG GRAVEL TRAILS. ACTUAL DESIGN FOR SITE SPECIFIC CONDITIONS WILL NEED TO BE DESIGNED BY A PROFESSIONAL REGISTERED IN THE STATE OF WASHINGTON.
B. ALL STEEL AND WWF SHALL BE A36 STRUCTURAL, HOT DIP-GALVANIZED, UNLESS NOTED OTHERWISE.
C. FOOTING DESIGN MAY VARY PER SITE CONDITIONS.
D. REFERENCE DETAIL 2840.04 FOR FOUNDTION AND POST BASE DETAILS.
E. ALL HARDWARE, PLATES, WWF, AND FASTENERS SHALL BE HOT DIP GALVANIZED.
F. WHERE TRAIL SLOPES, POSTS AND VERTICAL RAILS SHALL REMAIN PLUMB. HORIZONTAL RAILS SHALL BE SLOPED TO MATCH GRADE OF TRAIL.
G. BROWN PRESSURE TREATMENT SHALL BE USED ON ALL PRESSURE TREATED WOOD.
H. CONTRACTOR SHALL SUBMIT DETAILED SHOP DRAWINGS PRIOR TO CONSTRUCTION. SHOP DRAWINGS SHALL SHOW ALL TRANSITIONS, JOINTS, AND PANEL SECTIONS AT BOTH HORIZONTAL AND VERTICAL CURVES.
I. ALL LUMBER SHALL BE DF-2. REFERENCE WSDOT SPECS FOR GRADE STAMP AND SUBMITTAL REQUIREMENTS.
J. WHERE PREFABRICATED METAL CONNECTORS ARE SHOWN, USE FASTENERS IN ALL OPEN HOLES AS RECOMMENDED BY MANUFACTURER.